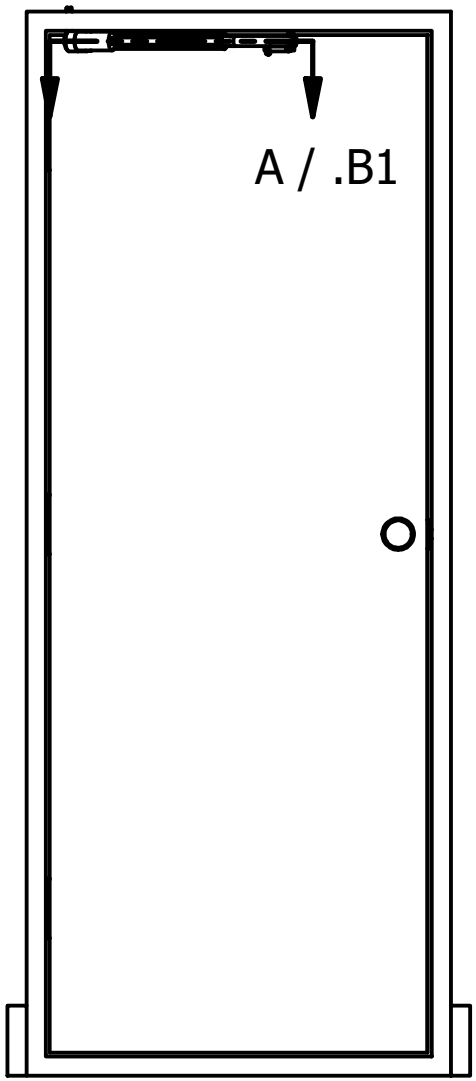

SCALE 1 / 15

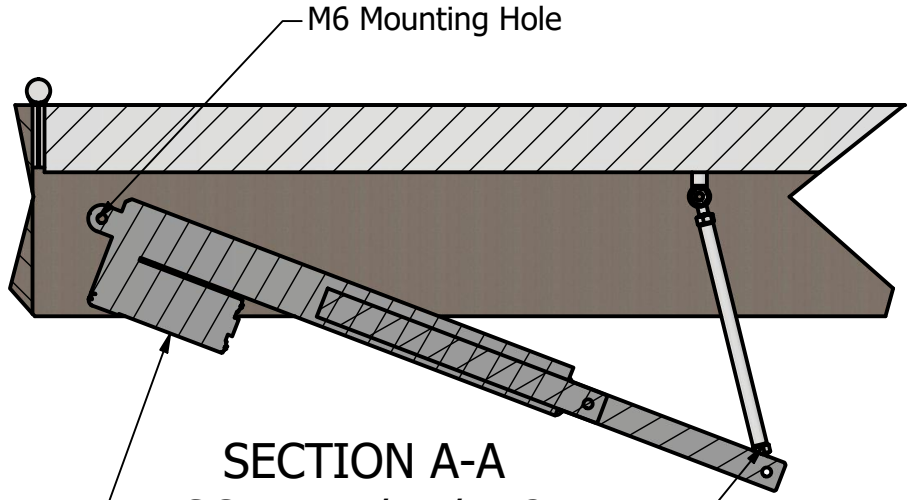

SECTION A-A
SCALE 1 / 5 / .B2

ILLINOIS INSTITUTE OF TECHNOLOGY

TITLE: Door Opening Mechanism - Attempt 1, Assembly		
UNITS: in	DWG NO: Opening1	REV
DRAWN: Brandon Lis	SHEET 1 OF 1	

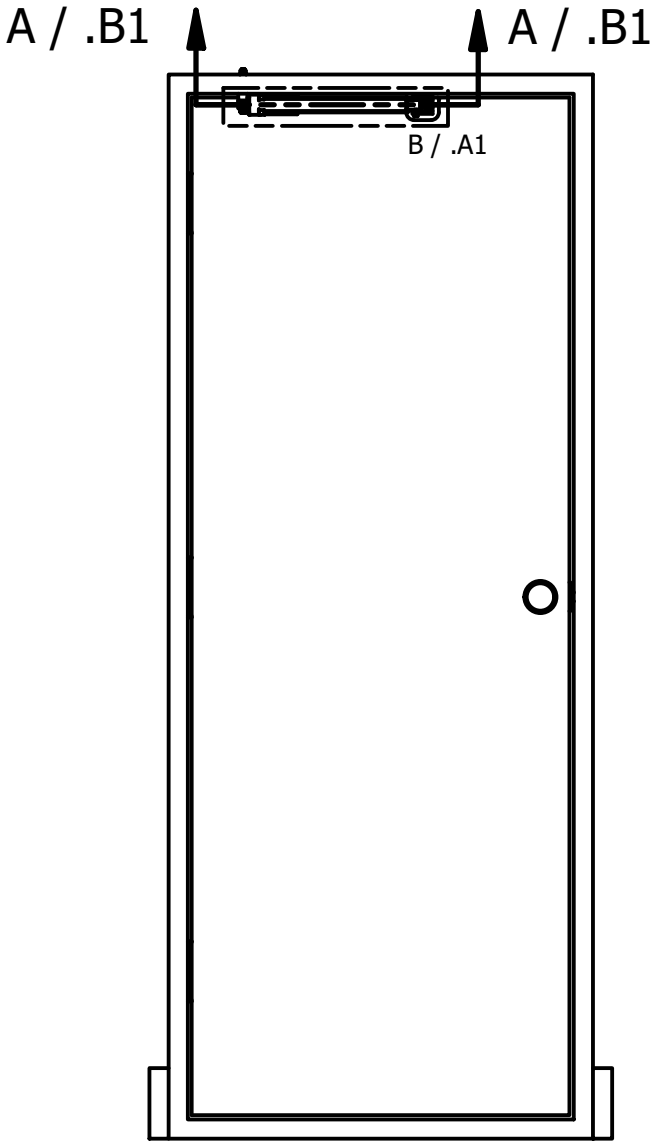

SCALE 1 / 15

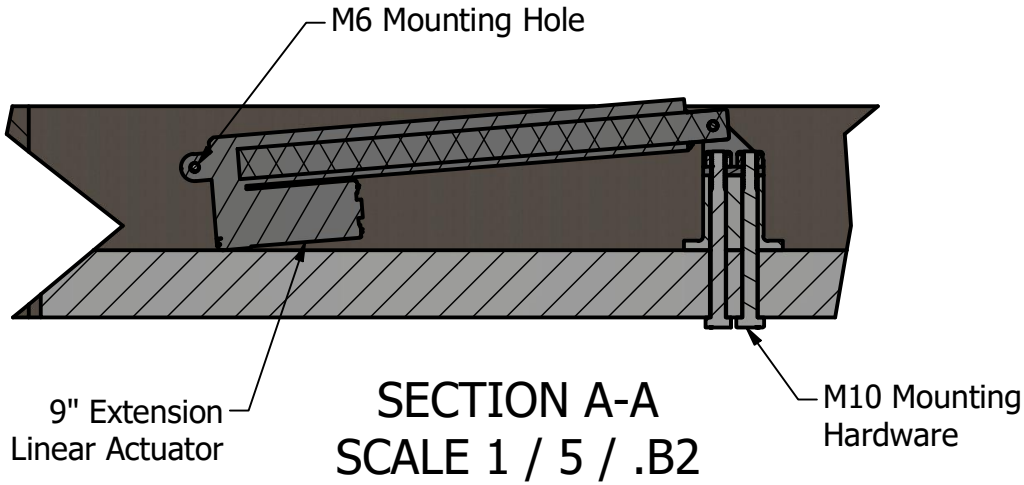

SECTION A-A
SCALE 1 / 5 / .B2

DETAIL B
SCALE 1 / 5 / .B2

ILLINOIS INSTITUTE OF TECHNOLOGY

TITLE
Door Opening Mechanism - Attempt 2, Assembly

UNITS	DWG NO	REV
in	Opening1	

DRAWN Brandon Lis

SHEET 1 OF 2

Actuator Spacer

PLA - 1 / 1 SCALE

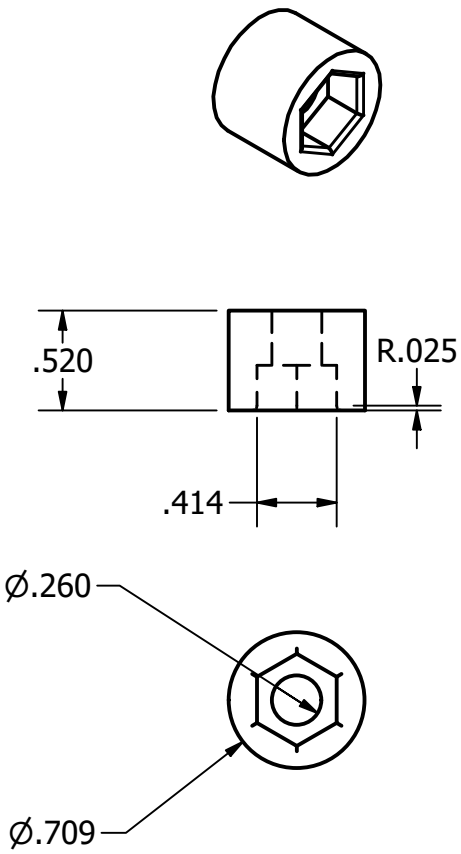

Bracket Spacer

PLA - 1 / 2 SCALE

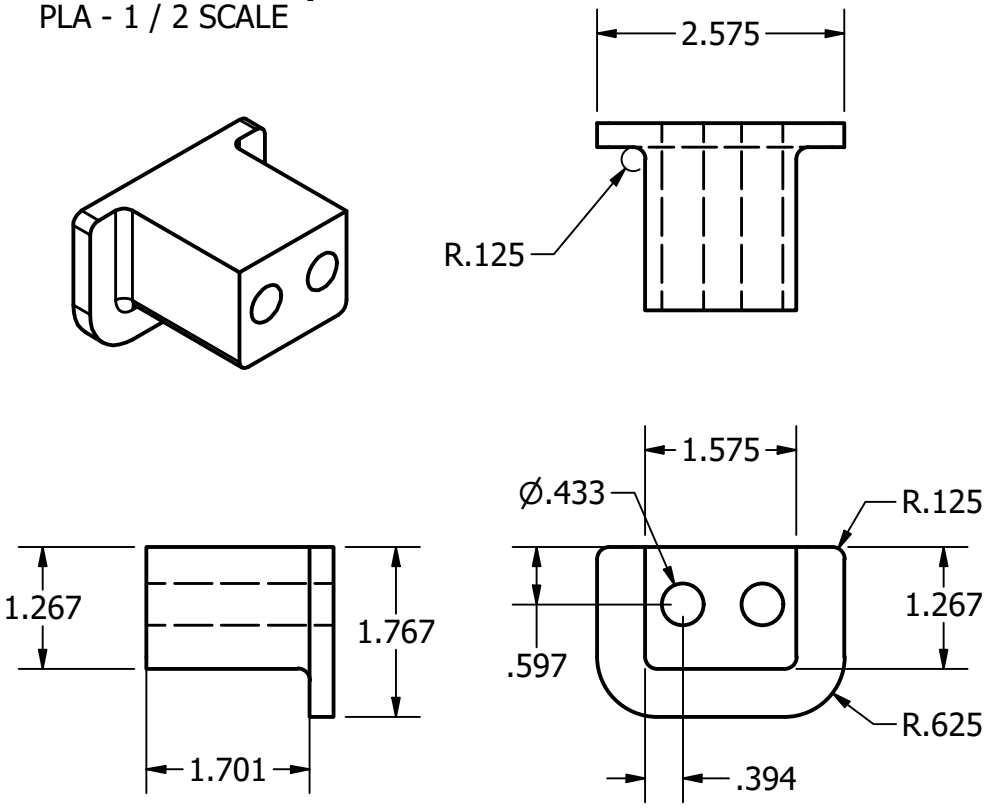

ILLINOIS INSTITUTE OF TECHNOLOGY

TITLE

Door Opening Mechanism - Attempt 2, Parts

UNITS	DWG NO	REV
in	Opening1	

DRAWN Brandon Lis

SHEET 2 OF 2

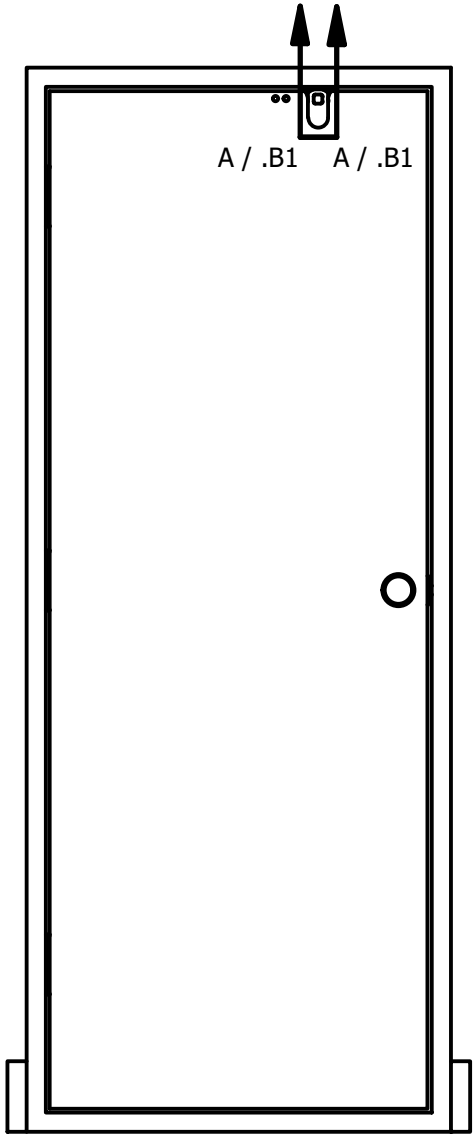

SCALE 1 / 15

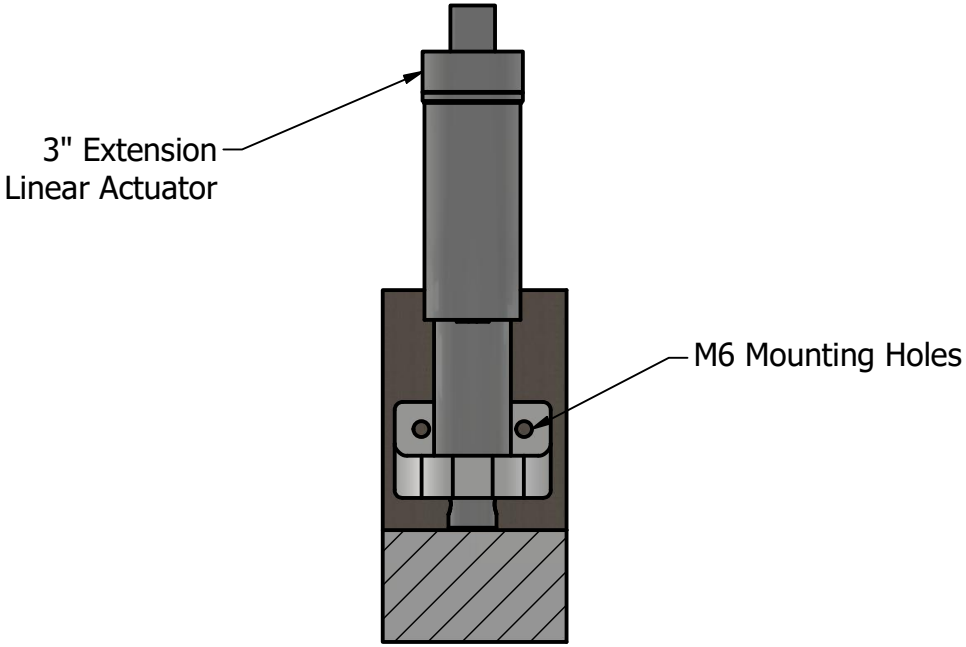

SECTION A-A
SCALE 1 / 3 / .B2

ILLINOIS INSTITUTE OF TECHNOLOGY

TITLE: Door Opening Mechanism - Attempt 3, Assembly		
UNITS: in	DWG NO: Opening1	REV
DRAWN: Brandon Lis	SHEET 1 OF 2	

Actuator Mount

PLA - 1 / 1 SCALE

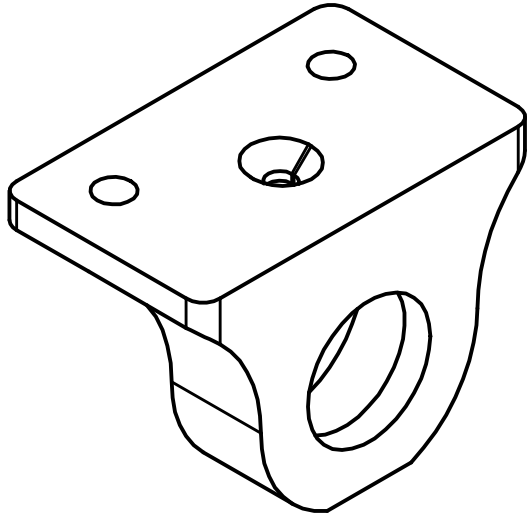

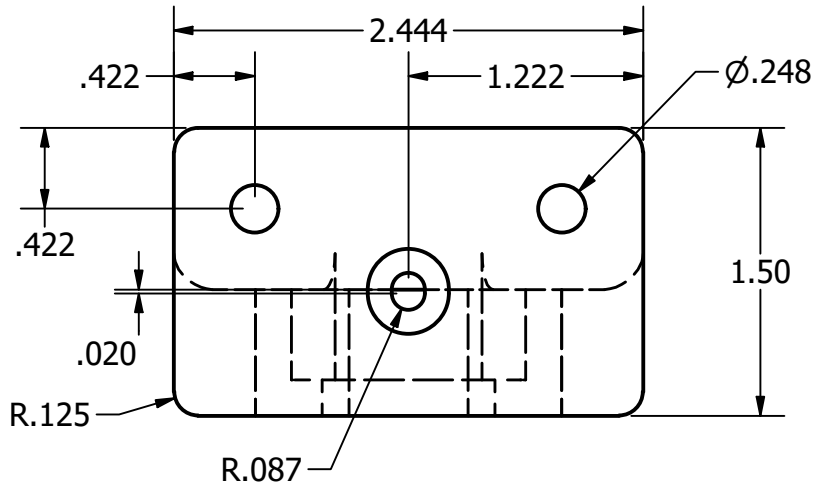

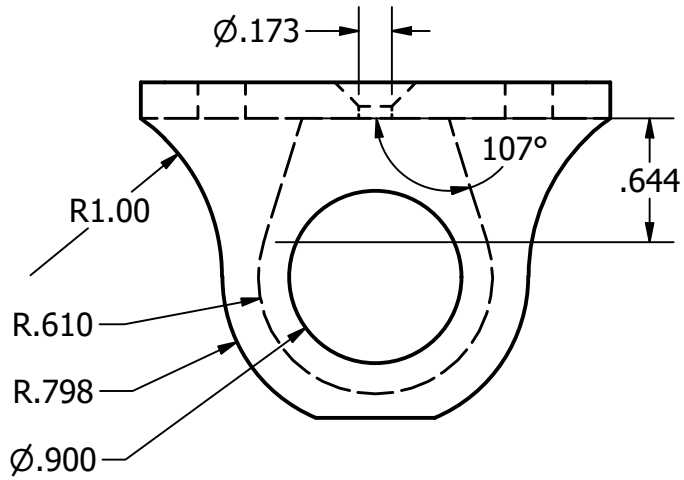

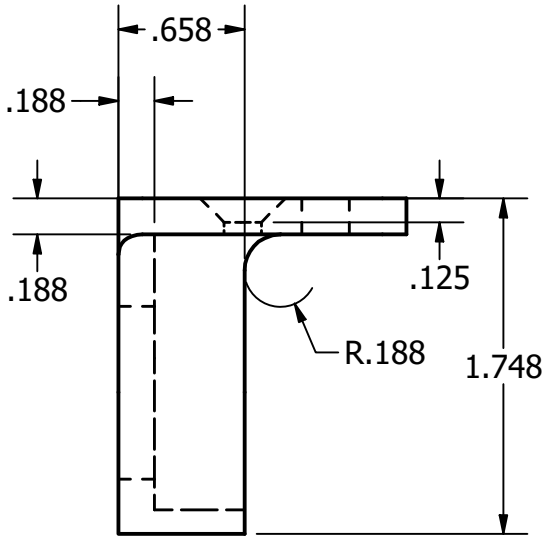

ILLINOIS INSTITUTE OF TECHNOLOGY

TITLE: Door Opening Mechanism - Attempt 3, Parts		
UNITS: in	DWG NO: Opening1	REV
DRAWN: Brandon Lis	SHEET 2 OF 2	